QUARTER-TURN ELECTRIC ACTUATOR

J4C 300

Compact multi-voltage electric actuator

A compact quarter-turn electric actuator in anticorrosive polyamide housing with brushless 24 VDC motor, visual position indicator, manual override and four limit switches.

- Anticorrosive polyamide housing
- Brushless motor, class B insulation
- IP67 to IEC 60529
- Automatic heater 3.5 W
- EN 175301-803 & DIN 43650/C plugs



300 Nm	58 s	IP67	0–270°
MAX. OPERATING TORQUE	PER 90° UNLOADED	IEC 60529	MAX. WORKING ANGLE

Models.

SAME MECHANICS, CHOICE OF SUPPLY

Model	S300	B300
Voltage	24 to 240 VDC/VAC 50/60 Hz -0/+5 % (patent pending)	12 V only
Operation time unload	58 s/90°	
Maximum torque break	350 Nm / 3097.5 lb·in	
Maximum operational torque	300 Nm / 2655 lb·in	
Duty rating	75 %	

OPTIONS

J4C 140/300 DPS digital positioner: 4-20 mA, 0-20 mA, 0-10 V or 1-10 V

J4C 140/300 BSR battery emergency fail-safe kit

Digital potentiometer 1K, 5K or 10K

3-position actuator 0°-45°-90° or 0°-90°-180°

ISO 5211
F07/F10 · option F12

OUTPUT DRIVE
DIN 3337 female *22 mm · option *17 mm

PROTECTION
IP67 (IEC 60529)

SUPPLIED & SUPPORTED IN THE UK BY
Actuation Valve & Control Ltd
actuation.co.uk

Technical data.

Operation time unload	58 s/90°
Maximum torque break	350 Nm / 3097.5 lb·in
Maximum operational torque	300 Nm / 2655 lb·in
Duty rating	75 %
Max. working angle	0° to 270°
Limit switch	4 SPST NO micro (2 motor stop and 2 confirmations)
Automatic heater	3.5 W
Big plug	EN 175301-803 form A
Small plug	DIN 43650/C
Protection IEC 60529	IP67
Temperature	-20 °C +70 °C / -4 °F +158 °F
Weight	5.2 kg

General characteristics.

Housing	Anticorrosive polyamide (lid & body)
Main external shaft	Stainless steel
External screws	Stainless steel
Gears	Steel and polyamide
Visual position indicator	Polyamide
Dome	Polycarbonate
Adjustable internal cams	Polyamide
Electric motor	24 VDC brushless motor
Insulation	Class B
Service (IEC 60034)	S4

Valve connection.

ISO 5211 plate	F07/F10 · option F12
DIN 3337 female output drive	*22 mm · option *17 mm

Dimensions.

MM / INCH

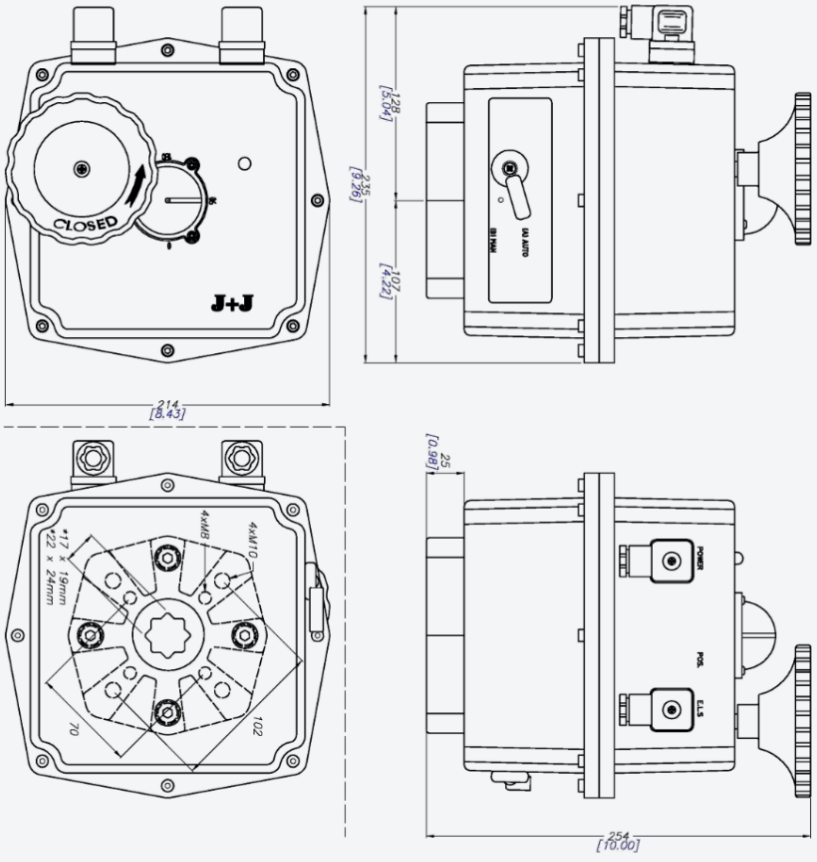

Data supplied by J+J Automation and provided for reference only. Specifications may change without notice – please confirm details with Actuation Valve & Control before ordering.

Automating a quarter-turn valve?
Talk to our UK team about J+J J4C actuators, DPS positioners and BSR battery fail-safe kits.
actuation.co.uk